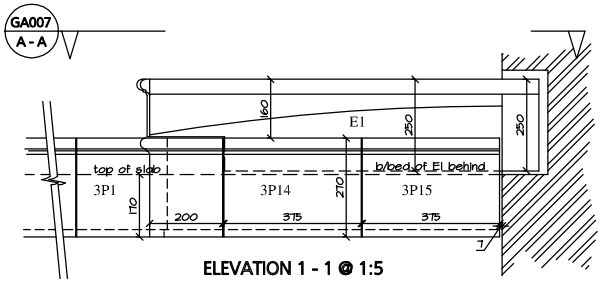

ELEVATION 1 - 1 @ 1:5

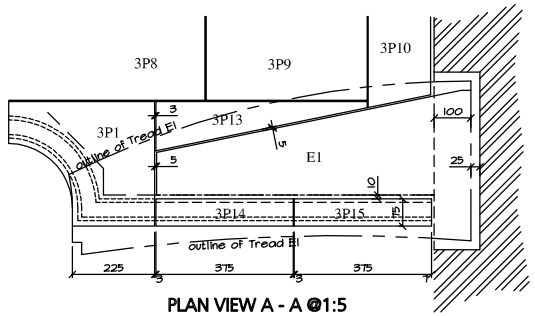

PLAN VIEW A - A @1:5

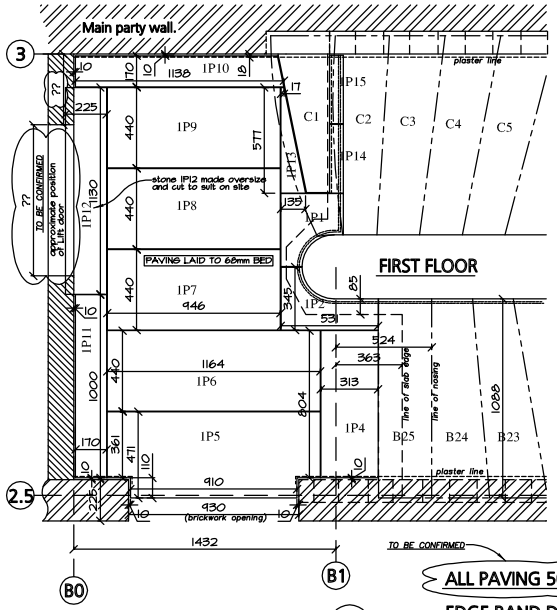

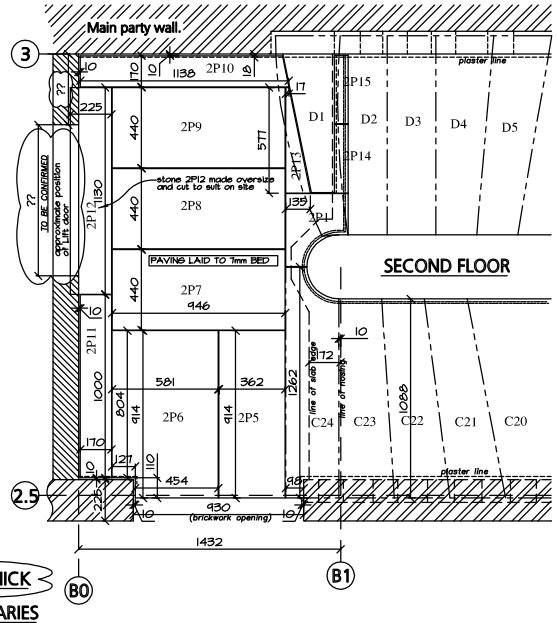

ALL PAVING 50mm THICK

EDGE BAND DEPTH VARIES
(STONES P1, P2, P3)

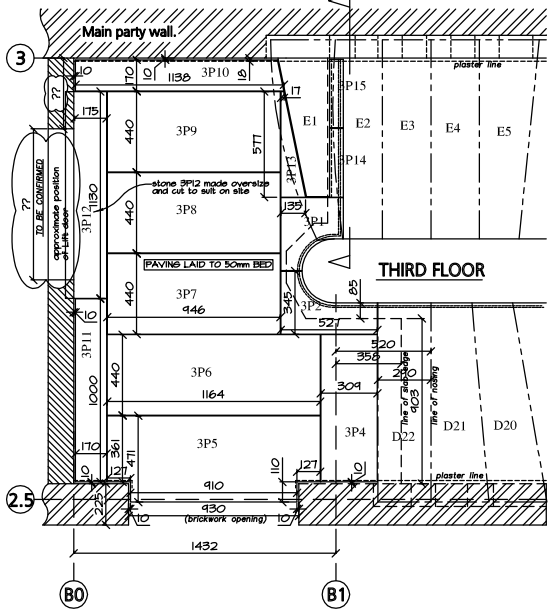

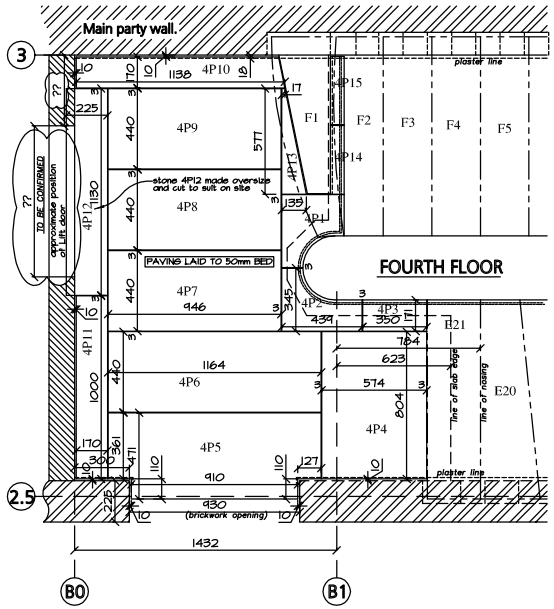

KEY PLAN

NOTE:
ALL FIXINGS TO BE STAINLESS STEEL UNLESS STATED OTHERWISE
DWG'S TO BE READ IN CONJUNCTION WITH ARCHITECTS DWG'S

All stone beds and joints to be 3mm except where stated.

All dimensions/ details clouded as such to be confirmed.

Dimension styles:

40 — Gross overall sizes including joints.

40 — Net stone sizes

Revised detail

Stone type: PORTLAND

This drawing to be read in conjunction with drawing nos :

GA003
GA004
GA005
GA006

DRAWING CREATED BY

stewart design (uk) limited
Tel: + 44 (0) 1608 811500 Fax: +44 (0) 1608 811700
e-mail: design@stewartdesign.co.uk
website: www.stewartdesign.co.uk

REV	DATE	AMENDMENT
A	25.10.00	Jointing updated to Architects comments.

Issued for
- ☐ As Built
- ☐ Information
- ☐ Site

COPYRIGHT
Not to be reproduced without written permission

PROJECT
41 Upper Brook Street
Mayfair
London

DRAWING TITLE
STONEMASONRY
Paving & Edge Band Facing layout to Landings
First, Second, Third, and Fourth Floor Levels

APS Masonry
AXTELL PERRY SYMM MASONRY LIMITED
OSNEY MEAD, OXFORD, OX2 0EQ
TEL (01865) 254600
FAX (01865) 254617
E-mail Dean@APSMasonry.com

DRAWN BY	JPS	Checked by	AGM
SCALE	1:10/1:5 @ A0		
DATE	29th August 2000		
DRAWING No.	JOB No XO36	DWG No GA007	REV A